European Journal of Mechanical Engineering Research
Vol.6, No.1, pp.25-31, April 2019
Published by European Centre for Research Training and Development UK (www.eajournals.org)

OPTIMIZATION MODEL OF LAWN MOWER BLADE GEOMETRY TO ATTAIN IMPROVED CUTTING EFFICIENCY

Shadrack Mathew Uzoma[1] and Tobinson A. Briggs*[2]
[1,2]*Department of Mechanical Engineering, University of Port Harcourt, Port Harcourt, Rivers State*

ABSTRACT: *This paper is on the optimization models for Lawn Mower cutting blade and the power rating in driving blade geometrical configuration to the expected performance specifications. The research was tailored to developing need breed of this device that would perform under service condition with significant operational efficiency. The structural framework for coupling and installation of lawn mower is highly advanced, with the mechanics and dynamics of the cutting action when the blade is operating, to the researcher is viewed as a strong area of study. A cutting blade designed to function at an optimal level of performance would drastically improve the efficiency of cutting action with a tremendous reduction in power required to drive the system.*

KEYWORDS: Blade angle, Performance specifications, Grass terrain, Cutting force, Blade parameter, Improved performance efficiency.

INTRODUCTION

Lawn Mower has been a versatile piece of equipment as a substitute for machete used conventionally in mowing a lawn. History had it that Edwin Budding invented the first lawn mower in Gloucestershire, England. Specifically, the lawn mower is a bladed rotor designed for grass cutting around sports ground and gardens [4,5]. Budding's Lawn Mower rotor blade base diameter is 420mm. It was fabricated from wrought iron. It is worthy to note that different designs and models of Lawn Mowers had been patented and produced [6,7,8,9,10] and more so in wider circulation the world over. Lawn Mower invention has made easy lawn mowing in our present scheme of keeping our environment neat and tidy. This modern attitude of lawn mowing has made the conventional way achieved by the use of machete obsolete. Lawnmower designs are characterized by cutter deck research, noise and vibration analysis, and auto-control technology. Cutter deck research was focused on finding solutions to mowing effect problems concerning structural mechanics and aerodynamics. Generally, the cutter deck houses the blade which can be rotary, hob, and reciprocating as the case may be, and the cutter deck can either be sealed or open cutter room with various types of cutter deck structures such as single-deck single-cutter, single-deck multi-cutter, and independent multi-deck structures. The design of the cutting blade is of crucial importance in improving the mechanical properties and grass cutting efficiency of the mower. Also, if the grass is not properly cut due to the positioning of the blade, the grass dies and affects the lawn [11]. Md Shamim [16] applied the use of Computational fluid dynamics (CFD) and Finite Element Analysis (FEA) in the design of a lawn mower mulching blade in other to obtain an increased lift force and attenuated aero-acoustic noise in optimized blade design. Their results showed a substantial reduction in turbulent kinetic energy relating to aero-acoustic noise. Lower structural loading was observed, which was partially due to the reduced pressure gradient at the outer cutting region of the blade. Li et al. [15] optimized the lawn mower blade

Print ISSN: ISSN 2055-6551(Print), Online ISSN: ISSN 2055-656X(Online)

design using aerodynamics principles, with an emphasis on airflow conditions around the blade during operation. From the results, increasing the blade cutting angle resulted in improved cutting efficiency but with increased turbulence air flow around the blade and an optimal blade cutting angle of 5° was obtained.

Nagarajan et al. [14] designed a grass cutting helix shaped mower with a spiral blade connected to a gear system. The high cutting rate achieved at optimum clip rate between the grass and reel blade and with low moisture content on the field surface. An investigation of the aerodynamic effects on a triple-blade lawn mower deck design was carried out by Hagen et al. [12]. Their results indicated that the blades orientation and deck configuration are significant in achieving improved system efficiency. Basil [13] designed a self-powered mower made up of a system of collapsible cutting blades driven by speed multiplication pulleys and a lift mechanism to maintain the height of cut. Cutting efficiency of 89.55% was obtained with high adaptability to different cutting conditions from the performance analysis.

SIGNIFICANCE OF RESEARCH

The structural framework for coupling and installation of lawn mower is highly advanced, with the mechanics and dynamics of the cutting action when the blade is operating, to the researcher is viewed as a substantial area of study. A cutting blade designed to function at an optimal level of performance would drastically improve the efficiency of cutting action with a tremendous reduction in power required to drive the system.

MATHEMATICAL MODEL DEVELOPMENT

The Lawn Mower is a bladed rotor; the geometric representation of the blade and forces acting on it is as shown in Figure 1 below:

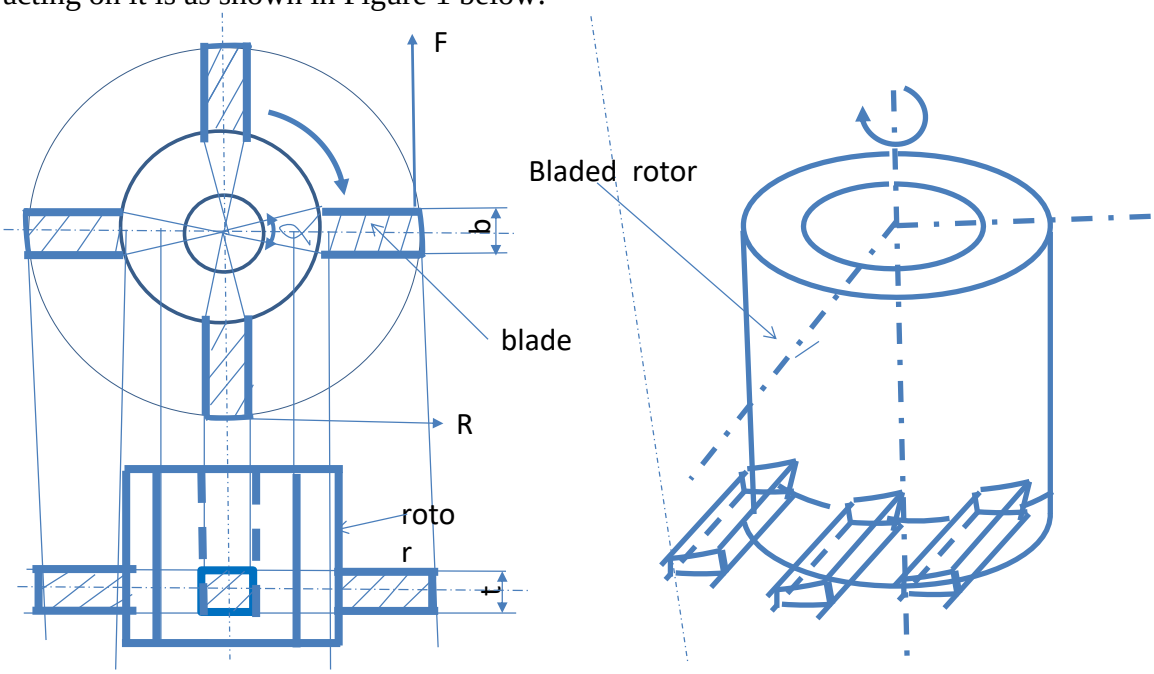

Figure 1: Views of the blade rotor

Print ISSN: ISSN 2055-6551(Print), Online ISSN: ISSN 2055-656X(Online)

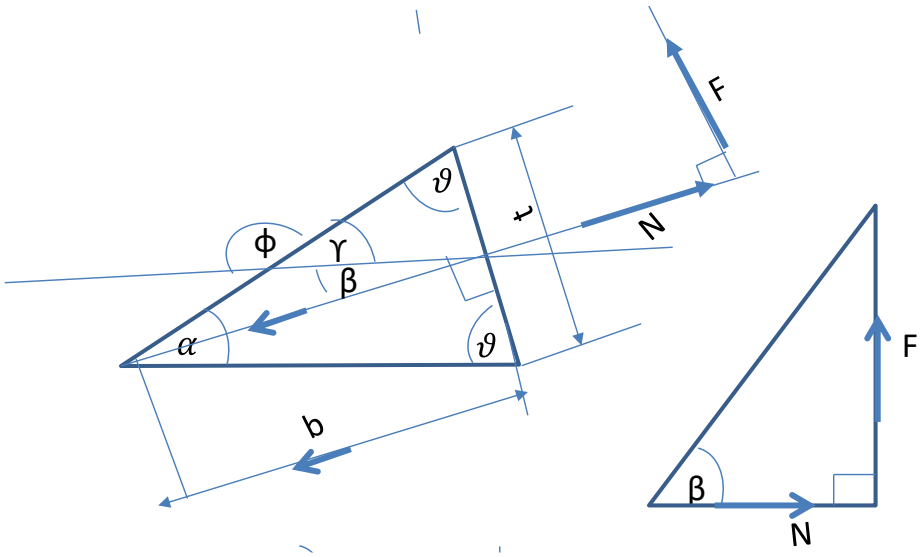

Figure 1: Geometric representation of the blade cutting angle and thickness

The cutting resistance of the grass taken as τ_g and the tangential force on the blade as F and while the base area is A. The base diameter being d, therefore:

$$\tau_g = \frac{F}{A}$$

$$F = \tau_g A = \tau_g \frac{\pi d^2}{4} \tag{1}$$

The cutting torque, T acting on the blade represented as:

$$T = Fr = \frac{Fd}{2} = \tau_g \frac{\pi d^2}{4} \quad \tau_g A = \tau_g \frac{\pi d^2}{4} \times \frac{d}{2}$$

$$T = \tau_g \frac{\pi d^3}{8} \tag{2}$$

If ω is the angular rate of rotation of the blade per minute and N_b is the blade revolution per second the,

$$\omega = \frac{2\pi N_b}{60} \tag{3}$$

Power required to drive the blade expressed as :

$$P = T\omega = \tau_g \frac{\pi d^3}{8} \times \frac{2\pi N_b}{60} = \tau_g \frac{\pi^2 d^3 N_b}{240} \tag{4}$$

Equation 4, gives the equivalent power or horsepower to drive the electric motor.
Let the shearing resistance of the rotor shaft material be τ_{rs} and its area of cross section A_{rs}, then;

Print ISSN: ISSN 2055-6551(Print), Online ISSN: ISSN 2055-656X(Online)

$$\tau_g = \frac{F}{A_{rs}}$$

$$F = \tau_{rs} A_{rs} = \tau_{rs} \frac{\pi d_{rs}^2}{4} \quad (5)$$

Torque T_{rs} on the rotor shaft expressed as:

$$T_{rs} = \tau_{rs} \frac{\pi d_{rs}^3}{8} \quad (6)$$

E.quation 4 and 6 give the expression for the rotor shaft diameter, d_{rs}.

$$\tau_{rs} \frac{\pi d_{rs}^3}{8} = \tau_g \frac{\pi^2 d^3 N_b}{240}$$

$$d_{rs} = \sqrt[3]{\frac{\tau_g}{\tau_{rs}} d^3} \quad (7)$$

If the speed reduction of the electric motor is N(rev/min) and the speed reduction from the motor to the driven blade is ½, then :

$$\frac{N_b}{N} = \frac{1}{2}$$

$$N_b = \frac{1}{2} N$$

Power to drive the cutting blade is expressed as :

$$P_{ele} = \tau_g \frac{\pi^2 d^3 N_b}{240} = \tau_g \frac{\pi^2 d^3 \frac{N}{2}}{240}$$

$$= \tau_g \frac{\pi^2 d^3 N}{480} \quad (8)$$

The cutting force, F, imparted on the blade could be expressed as:

$$P_{ele} = FV$$

$$F = \frac{P_{elec}}{V}. \quad (9)$$

The power required to drive the cutting blade should be dependent on the number of the blade, n, and the area of the cutting blade occupied by the base. Hence, the concept of blade area ratio, A_r.

$$A_r = \frac{Effective area\ of\ the\ cutting\ blade}{Area\ of\ the\ cutting\ base}$$

Where,

$$0 \le A_r \le 100\%$$

$$A_r = \frac{A - A_b}{A} \quad (10)$$

$$A = \frac{\pi d^2}{4} - \frac{\pi d_{rs}^2}{4}, \qquad A_b = nt\left(\frac{d - d_{rs}}{2}\right)$$

Print ISSN: ISSN 2055-6551(Print), Online ISSN: ISSN 2055-656X(Online)

$$A_r = \frac{\left(\frac{\pi d^2}{4} - \frac{\pi d_{rs}^2}{4}\right) - \left(nt\left(\frac{d - d_{rs}}{2}\right)\right)}{\left(\frac{\pi d^2}{4} - \frac{\pi d_{rs}^2}{4}\right)} - 1 - \frac{2nt}{\pi(d + d_{rs})}$$

With referenceto Fig. 1, $d_{rs} = \frac{2t}{\alpha}$.

$$A = 1 - \frac{2nt}{\pi\left(d + \frac{2t}{\alpha}\right)} \tag{11}$$

The power to drive the cutting blade expressed regarding the blade area ratio A_r,

$$P_{Ar} = \tau_g \frac{\pi^2 d^3 N}{480} \times A_r$$

$$= \left(\tau_g \frac{\pi^2 d^3 N}{480}\right)\left(1 - \frac{2nt}{\pi\left(d + \frac{2t}{\alpha}\right)}\right) \tag{12}$$

At optimal blade width t, for effective cutting action, $dP_{Ar}/dt=0$.

$$\frac{dP_{Ar}}{dt} = \pi\left(d + \frac{2t}{\alpha}\right)2n - \frac{4\pi nt}{\alpha} = 0$$

$$t_{opt} = \frac{\pi d\alpha}{2(n-1)} \tag{13}$$

Optimal power to drive the system expressed as,

$$P_{optr} = \left(\tau_g \frac{\pi^2 d^3 N}{480}\right)\left(1 - \frac{2nt_{opt}}{\pi\left(d + \frac{2t_{opt}}{\alpha}\right)}\right) \tag{14}$$

The blade angle, β, is expressed as:

$$\tan\beta = \frac{R}{F}$$

$$\beta = \tan^{-1}\frac{R}{F} \tag{15}$$

Optimal blade width, b_{opt}, is given as:

Print ISSN: ISSN 2055-6551(Print), Online ISSN: ISSN 2055-656X(Online)

$$\frac{t_{opt}/2}{\sin(\alpha/2)} = \frac{b_{opt}}{\sin\left(90 - \frac{\alpha}{2}\right)}$$

$$b_{opt} = \frac{t_{opt}\tan\left(\frac{\alpha}{2}\right)}{4} \tag{16}$$

The improved cutting efficiency is the ratio of optimal power to the real power requirement.
Thus,

$$\eta = \frac{P_{opt}}{P} \tag{17}$$

The expression of the above equations gives solutions to mowing effect problems relating to aerodynamics and the structural mechanics. Therefore, the grass cutting efficiency of the mower depends on the design and the mechanical properties of the cutting blade. It is also important to know that the death grass effect on the lawn mower is as a result of improper cut on the grass due to the blade position.

CONCLUSION

Mathematical models for the optimization of lawn mower blade geometry have been developed. This research work was tailored to optimizing lawn mower blade geometry to improve upon the design, operational and performance efficiency of Lawn Mower during cutting action.

FUTURE RESEARCH

Computer simulation of the developed mathematical is recommended to determine the major effects of the cutting force, optimal blade with, optimal blade thickness and the cut angle on the overall performance efficiency of the cutting blade.

References

1 DHTRUST(2016) History of Lawn Mower Part Three : 1870s-1890s, Available at htt://www.hdtrust.co.uk/hist03htm [retrieved November 20,2016].)
2 Kinmander, O. : Rise of Lawn-Cutting Machines, Bloomberg Business week, Available at http://www.oldlawnmowerclub.co.uk/aboutmowers/history.
3 Rodney A. B. (1999) : A robust layered control system for a mobile robot, (EEE Journal of Robotics and automation, page 14.
4 The Hall & Duck Trust (2011): " Lawn Mower History Part 2", Available Hdtrust.co.uk [Retrieved April 23, 2011].
5 The Old LAWN Mower Club, "Mower Club" [Retrieved April 23, 2011].
6 Basil, O. (2013): Simple Design of Self-Powered Lawn Mower, Department of Mechanical Engineering, Federal University of Technology Owerri, Imo State, Nigeria.International Journal of Engineering and Technology Volume 3 No. 10.

Print ISSN: ISSN 2055-6551(Print), Online ISSN: ISSN 2055-656X(Online)

7 US RE 8560 Pass more, Everett G, "Improvement in Lawn Mowers," published 23 February 1869, issued 23 January 1879, see pg 1, Col. 2.

8 Van den Berg, J. (2013): Socio-economic factors affecting adoption of improved Agricultural practices by small scale farmers in the South African Journal of Agriculture Vol. 8 (35), pp 4490-4500.

9 Xiao o. and Wang M. (2011): study and implementation on batteries charging of Lawn mower, smart grid, and renewable energy (2) (4) pp. 322-329.

10 Yong D. R. and Chow, S. H. (1991): Design and Construction of an Improved Domestic Lawn Mower, Project: Beijing Institute of Technology, China.

11 Dutta, P. P., Baruah, A., Konwar, A., and Kumar V., (2016) A Technical Review of Lawn Mower Technology, ADBU-Journal of Engineering Technology, ISSN: 2348-7305, *Available at* https://www.researchgate.net/publication/296555869

12 Hagen, P. A., Chon W., Amano, R. S., (2002) Experimental study of aerodynamics around rotating blades in a lawn mower deck, Proceedings of ASME, Fluids Engineering Division Summer Meeting, Montreal, Canada, 2002

13 Basil, O., (2013) Simple Design of Self-Powered Lawn Mower, International Journal of Engineering and Technology, ISSN: 2049 – 3444, (3) 10.

14 Nagarajan, N., Sivakumar, N. S., and Saravanan, R., (2017) Design and Fabrication of Lawn Mower, Asian Journal of Applied Science and Technology, (1) 4, pp50 - 55

15 Li, Z., Lei, Z., and Huakun, W., (2011) Optimization Design of the Lawn Mowing Vehicle's Blade Based on Aerodynamics, Advanced Materials Research, (199-200) pp 173-181

16 Md Shamim, R., Jianhui X. and Amano, R. S., Hagen, P. A., (2003) Computational Fluid Dynamics and Finite Element Analysis of a Lawn Mower Mulching Blade Optimization, Proceedings of the International Conference on Mechanical Engineering (ICME2003), Dhaka, Bangladesh

Print ISSN: ISSN 2055-6551(Print), Online ISSN: ISSN 2055-656X(Online)