European Journal of Computer Science and Information Technology
Vol.6, No.3, pp.1-12, June 2018
Published by European Centre for Research Training and Development UK (www.eajournals.org)

STUDY OF DATA PROCESSING IN GRAPHICAL PROGRAMMING ENVIRONMENT IN LAB VIEW ENLARGE

Adel Abdullah Abbas

Department of Computer Science, Ministry of Higher Education and Scientific Research

ABSTRACT: *The purpose of this paper is to implement the proposed algorithms and methods for processing data arrays (digital images) using Lab VIEW. Lab VIEW is the most visible and commonly used to solve various engineering computing problems and research problems. Processing digital image is bright enough and a good example of transformation and analysis of measurement data. Digital image transformation is widely used in industrial machine vision systems, measuring video system, application of television systems, broadcast television and so on. Appointment digital conversion of images is to create conditions to improve the image of perception (e.g. , X-ray or ultrasound medical diagnostics), the formation of a certain artistic image (in television), the allocation of informative signs (in image recognition systems, measuring systems, monitoring systems) and so on . Index pattern used to reduce the volume of images or the use of certain colors. Matrix element is a pointer to the table of colors. The number of colors used is equal to 2K, where K - number of bits of memory used to store the element matrix. The colors are specified in the table can be encoded by different numbers bits. For example, in 256 color modes selectable 256 video adapter's colors of 262144 possible, as represented in the selected color RGB-format for each color component are encoded by six bits. At all stages of this course project is done processing images in black and white or gray scale format.*

KEYWORDS: Binary image, Lab View Enlarge, computer processing images, Image Inversion.

INTRODUCTION

In paper will be used, such as a digital transformation, importing the data from the resulting file into an array; the inversion of the image; linear contrasting of the original image; the construction of linear and cumulative source and contrast of the image; linearization image obtained after the linear contrasting with different linearization thresholds; double increase contrast images using the zero-order extrapolation and interpolation of the first order for the recovery of intermediate image pixels; Exporting contrast and reduced images in bmp files. It is necessary to distinguish between the process images for visual perception and processing in automatic analysis devices, which come to the fore task allocation traits determine the exact current coordinates of the object and generate data on quantitative characteristics. Test images reflect patterns of interaction of light and other electromagnetic radiation with individual sections studied the scene. Modulation radiant flux occurs as energy value and the spectral distribution and the radiation is effected by interaction with the analyze by absorption phenomena of reflection, scattering, refraction, polarization or interference. It is in these properties are usually based in the use of imaging systems for automatic analysis to extract quantitative information about the object. Natural images are non-computer origin. AT they

ISSN 2054-0957 (Print), ISSN 2054-0965 (Online)

have almost no abrupt color transitions. Computer drawings as in other matters, and any others, are divided into two types: raster and vector. Raster images are stored as a rectangular matrix with elements determining the brightness of the color components. Vector image is a sequence of instructions for their construction. Example Team - a circle with its center at any point, and with a certain radius, textured material wood. The advantage of raster image - easy playback and realistic, lack - a large occupied volume, with scaling problems. In vector Images, on the contrary, the advantage - a small occupied space, ease of scaling and disadvantage - the need for a preliminary processing before playback, and the difficulty of creating realistic images. In what follows we shall consider only the raster image as a rectangular array. Consider the major formats used in computer processing images. Black-and-white format. Each element of the matrix is represented by one bit. If it is unity, then it is black color if zero - white. This is the simplest form; it is used when printing newspapers, recognition of texts and signatures. The format of the Gray scale (shades of gray). The difference in this format from the previous one is that the allocated 8 for each element of the matrix bits (one byte). This allows us to use 256 gray levels. If the matrix element is equal to 0, then we have a white color, with increasing value of the element 255, the brightness is reduced, and in case of equality value element 255 get black. In the interval from 0 to 255 levels will be placed gray color according to the rule: the closer it is to 255, the darker the gray. This format allows you to get pretty high-quality black-and-white images. The multi-channel format. In this case, the matrix element is represented by a vector with the coordinates of the color model used. Typically, a three-dimensional vector as the human eye responds to three different color components. Each component of the vector is most often it occupies one byte of memory.

Preparation of the original image

Create original digital image through digital photography and further processing in a graphics program. Saving your image in bmp format, 300x300 pixels (Figure 2).

Image processing by the element for transformation

The result of processing the frame at any point depends only on the value of the input image at the same point. The obvious advantage of such procedures is their extreme simplicity. However, many of them lead to an obvious improvement of the subjective visual quality. This determines the attention given block pattern. Without exaggerating their role, we note that the item-processing is often used as the final stage in the solution of more complex image processing tasks. It is often useful to emphasize enhance some features, especially the shades of the observed image in order to improve its subjective perception. Consider the nature of the image processing chip unit. So if images are gray scale format (black and white format – it special case) image luminance values correspond to the elements the resulting array of dots frame having Cartesian coordinates i (line number 8) and j (column number). Figure. 1 shows a part of the array, resulting of the image in Figure 2.

ISSN 2054-0957 (Print), ISSN 2054-0965 (Online)

8-bit pixmap

8	113	122	124	120	122	126	117	112	114	116
8	115	115	112	116	120	122	127	132	138	99
	115	92	100	116	123	122	121	124	131	127
	116	91	96	110	119	121	119	121	122	123
	107	89	99	111	117	120	119	120	124	123
	105	88	97	108	113	115	115	119	119	117
	97	86	96	108	113	113	111	114	119	119
	89	86	101	112	115	114	112	113	121	120
	89	91	109	117	116	115	112	111	114	113
	88	91	108	115	115	115	110	109	108	106
	80	87	101	108	111	113	108	104	105	104

Figure .1 importing data from the resulting file into an array

Figure 2. Image Inversion

Under the image inversion means the function of the negative of the original image, and vice versa (Figure 3). When using the eight bit gradation luminance gray level format encoded 256 levels (from 0 to 255). In fact, the transformation occurs white to black, considering all 256 levels of coding (Figure 3).

$$A\,inv = \left\{255 - A_{i,j}\right\}_{i=0..N-1,\, j=0..M-1}$$

ISSN 2054-0957 (Print), ISSN 2054-0965 (Online)

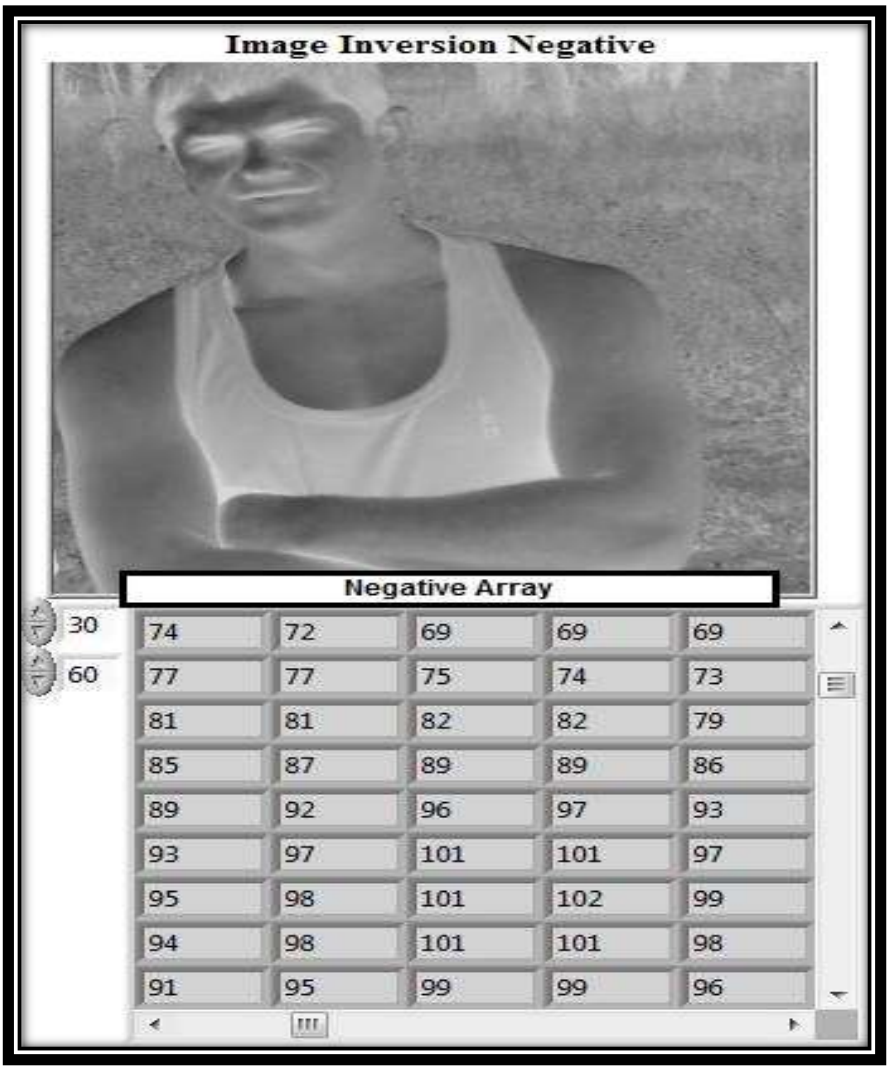

Figure .3 Image Inversion Negative

ISSN 2054-0957 (Print), ISSN 2054-0965 (Online)

Then the image inversion operation can be mathematically expressed as follows: In fact, using the conversion formula is carried out white to black, considering all 256 levels of coding.

Diagram. 1 Explain Lab View Evaluation Software

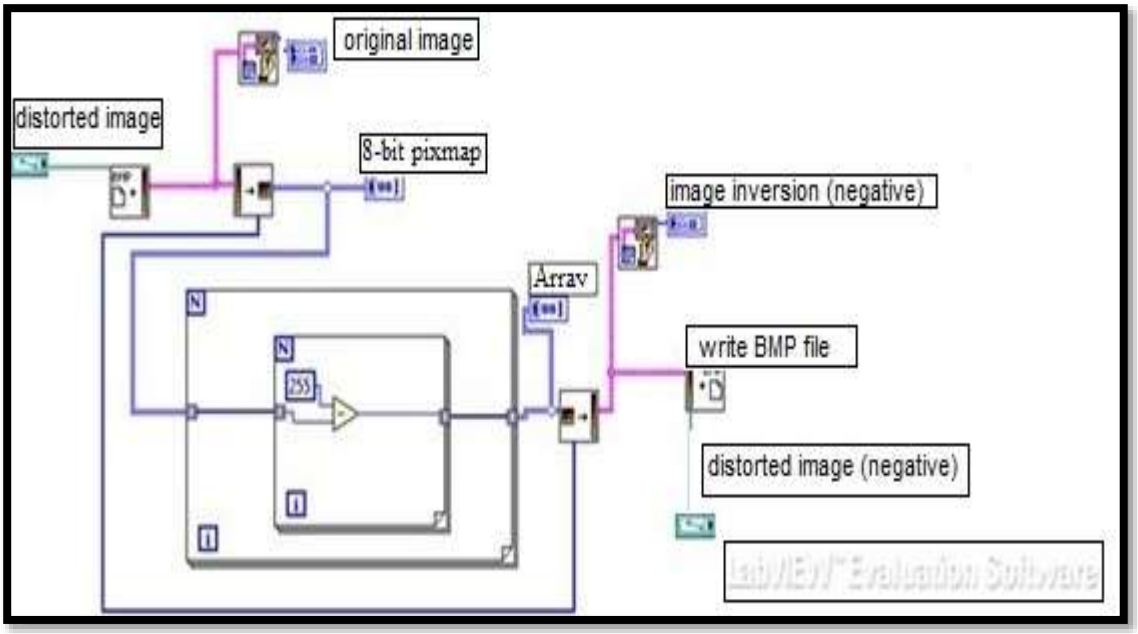

Linear contrast of the original image

The problem of contrast associated with improved coordination and dynamic image display range that is running visualization. In this case, the gray gradation on the encoding format of each reference image allocated 1 byte (8 bits) of the memory device, so the levels may be one of 256 values. Usually used as the working range of 0 ... 255; while a value of 0 corresponds with the black level visualization, and 255 - the level of white. Assume that the minimum and maximum brightness of the original image are equal and respectively. If these options or one of them is significantly different from the boundary values of the brightness range, the picture is visualized as an unsaturated, uncomfortable, and tiring under observation.

$$Am = \left\{ A_{i,j} \cdot \alpha + \beta \right\}_{i=0..N-1,\, j=0..M-1}$$

Unsaturated image can be obtained from a source using the following expression: Obtain unsaturated image (Figure. 4a), and then, using a linear contrast, improve its quality (Figure. 4b).

ISSN 2054-0957 (Print), ISSN 2054-0965 (Online)

Figure. 4a Obtain unsaturated image

Figure .4b Using a linear contrast and improve its quality

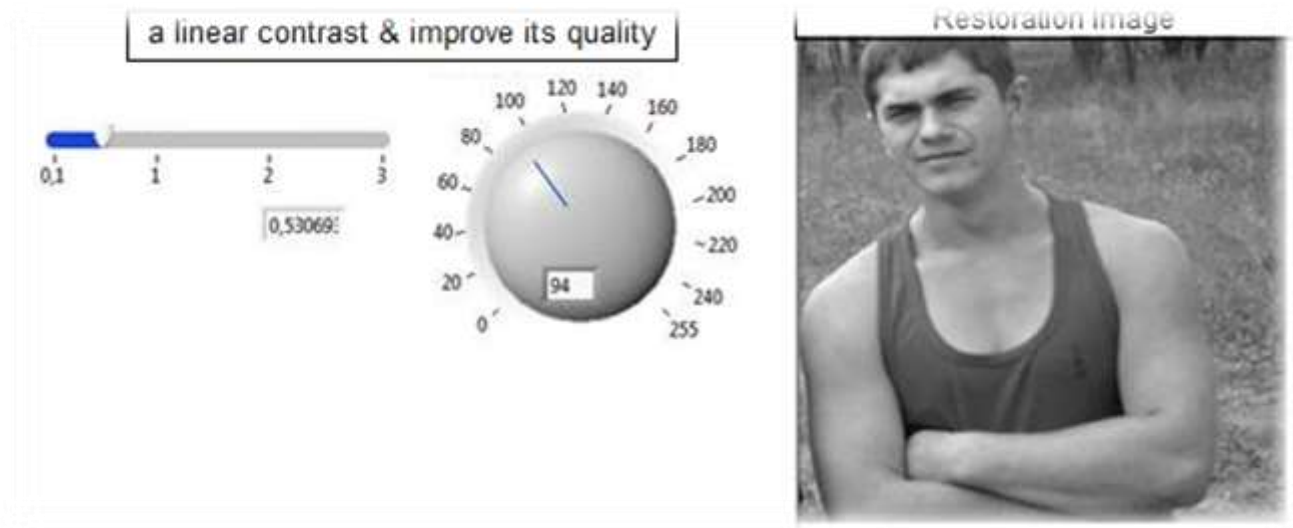

ISSN 2054-0957 (Print), ISSN 2054-0965 (Online)

$$Acor = \left\{ \left[\left(Am_{i,j} - \min \right) \right] \cdot \frac{255}{\max - \min} \right\}_{i=0..N-1, j=0..M-1}$$

When using the linear contrasting element-wise transformation of the form:

Diagram. 2 the linear contrasting element-wise transformation

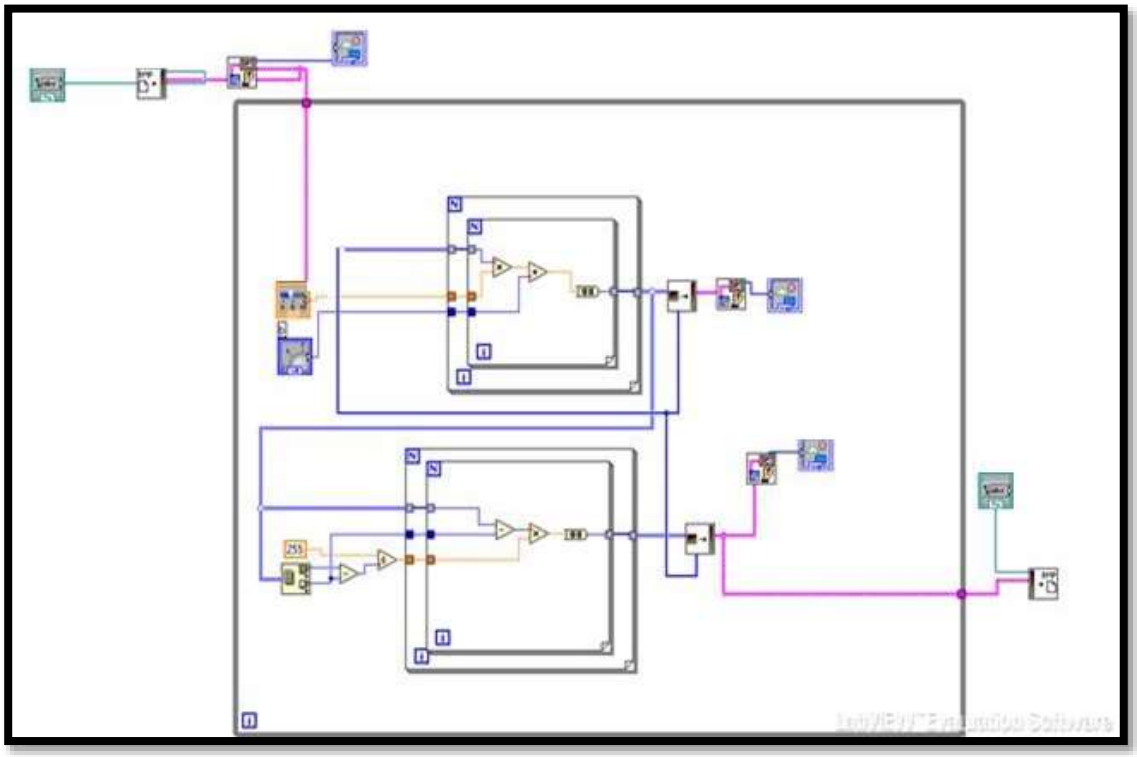

Construction linear and cumulative histograms of image for digital image format gray scale, the scale of which brightness belongs to the integer range 0 ...255, the histogram is a table of 256 numbers. Each one shows the number of pixels in a frame having a given brightness. Linear bar graph (Figurer 5a) defines an exhaustive search of the image matrix. The value of matrix elements turn is the indices of the array of the histogram. When you select any element of the matrix to the corresponding element of the array is added to the histogram unit. As a result, after exhaustive search matrix element of the array represents the total number of elements matrix corresponding brightness level. In the cumulative histogram (Figure 5b), any element of the array is equal to the sum of all the previous ones.

ISSN 2054-0957 (Print), ISSN 2054-0965 (Online)

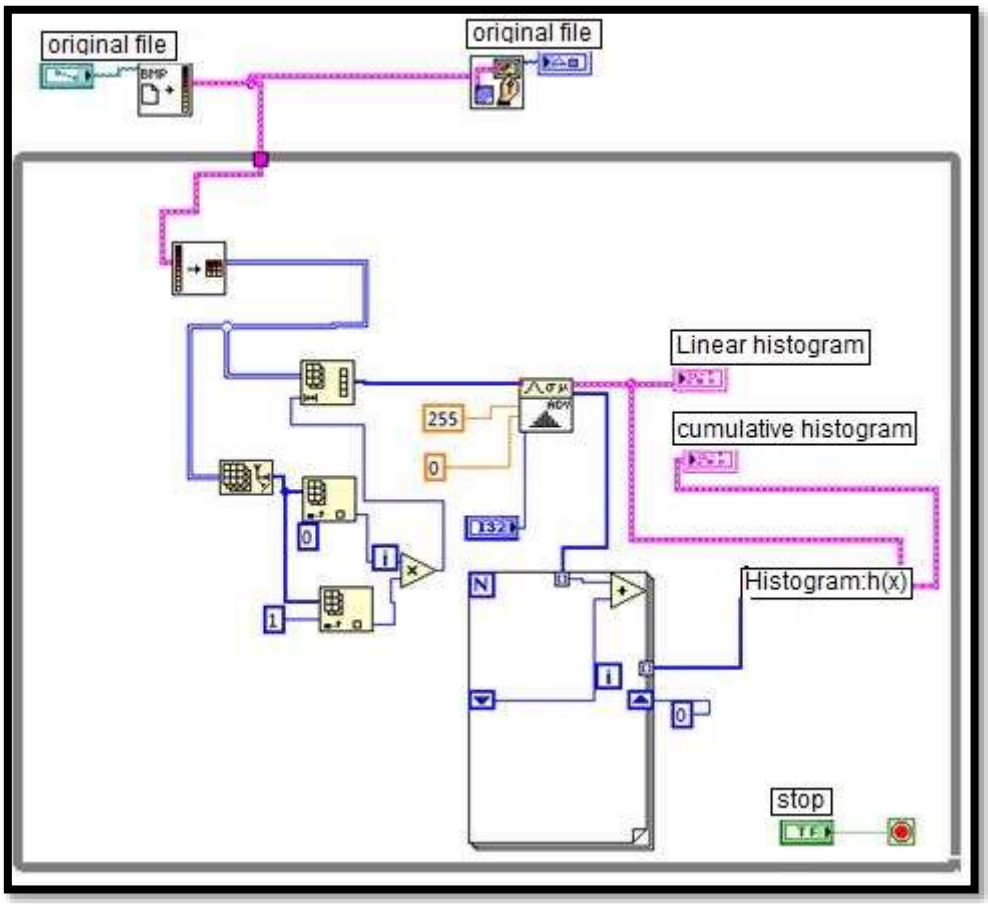

Diagram 3. Construction linear and cumulative histograms

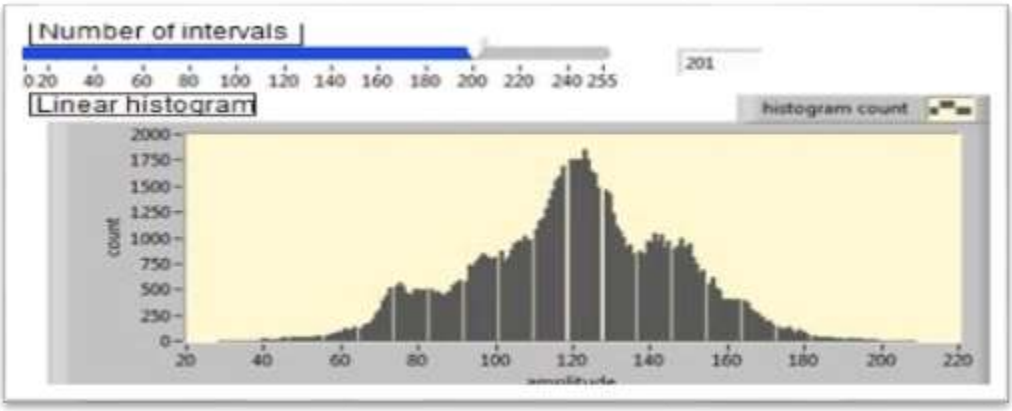

Figure. 5a linear bar graph

ISSN 2054-0957 (Print), ISSN 2054-0965 (Online)

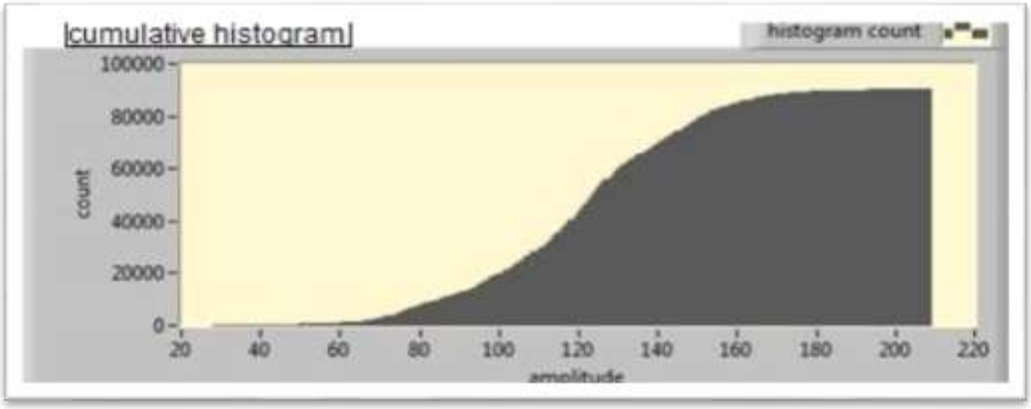

Figure .5b the cumulative histogram

The Binary image

Conversion with the threshold characteristic transforms a gray scale image containing all brightness levels in a binary, whose points have a brightness of 0 or 255. This operation is sometimes referred to as binearization or binary quantization, can be useful when the observer is important outlines of objects present in the image, and parts or objects contained within the inside of the background is not of interest (Figure 5). The mathematical formulation of the binearization process can be represented by the following expression:

$$Abinary = \left\{ 255, если A_{i,j} \geq P; 0, если A_{i,j} < P \right\}_{i=0..N-1, j=0..M-1}$$

The main problem of conducting such treatment is determination threshold P (I took threshold = 140), compared with that of the original brightness of the image to determine the value of the output brightness of the image at each point. The most reasonable for the mathematical description of the image is the application of probability theory, stochastic processes and random fields. At the same time to determine the optimal threshold binary quantization is a statistical problem. The probability density describing the distribution of the brightness of the image may include two well separated peaks. Intuitively, the threshold of the binary quantization should be selected in the middle of a gulf between these peaks. Replacing the original halftone image binary solves two main tasks. Firstly achieved blushes visibility for visual perception than the original image. Secondly, the significantly reduced amount of memory for storing the image as a binary format of each entry point of the image requires only one bit of memory, whereas for half toning - 8 bits. An example of linearization of the original image is shown in Figurer 6.

ISSN 2054-0957 (Print), ISSN 2054-0965 (Online)

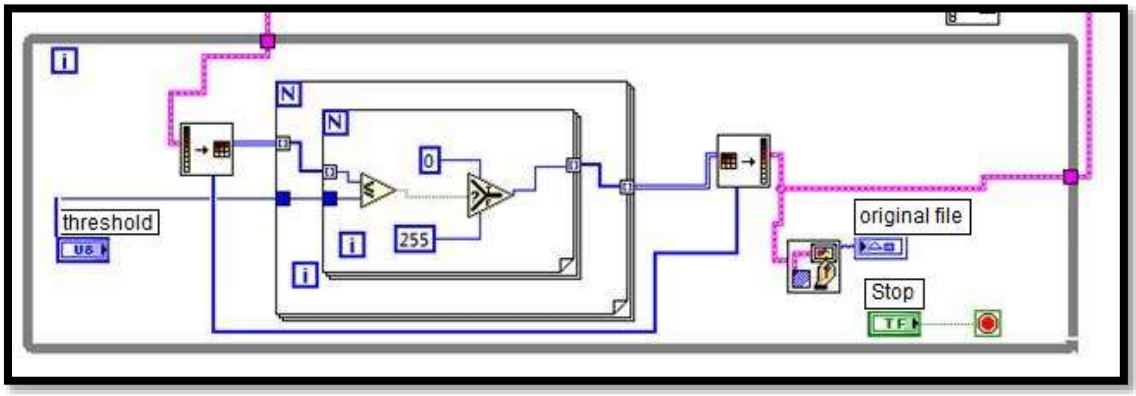

Diagram .4 linearization of the original image

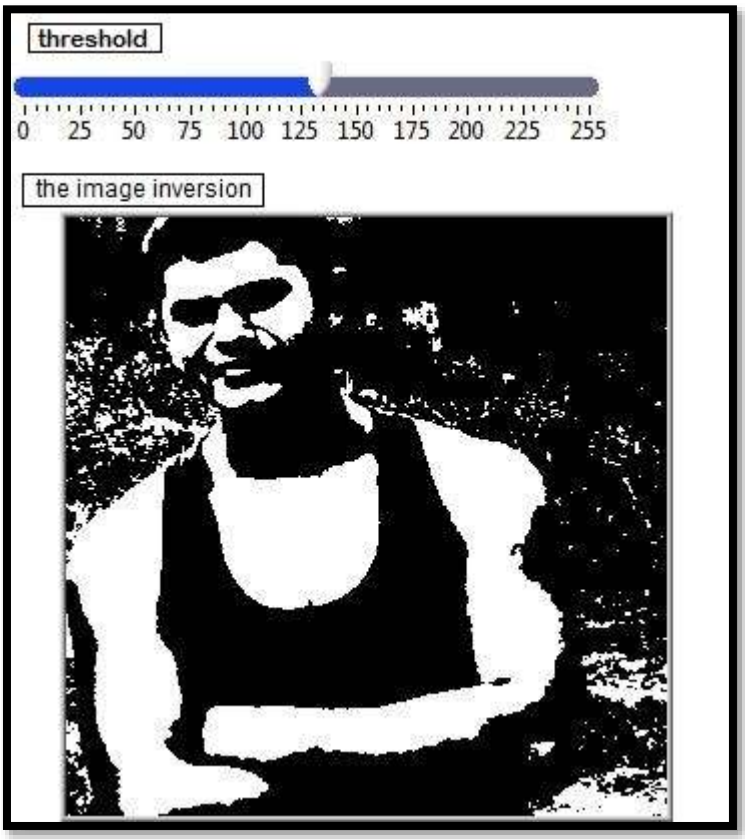

Figurer .6 linearization of the original image

CONCLUSION

Lab VIEW - software environment has been considered in the course of this work. As the object of study octet size of 300x300 pixels image was used. Test images reflect patterns of interaction of light and all other electromagnetic radiation with individual sections studied the

ISSN 2054-0957 (Print), ISSN 2054-0965 (Online)

image. Modulation radiant flux occurs as the largest of its energy, and the spectral distribution and is carried out by the interaction of its radiation to the target substance due to absorption, reflection, scattering, refraction, polarization or interference. It is in these properties are usually based in the use of imaging systems for automatic analysis to extract quantitative information about the object.

One of the advantages of Lab VIEW environment is the visibility of the algorithm implementation and an intuitive interface. In my opinion, the range of tasks in the Lab VIEW environment is very wide.

REFERENCES

A. Chambolle, R. A. DeVore, N.-Y. Lee, B. J. Lucier, (. 1998) "*Nonlinear wavelet image processing: Variational problems compression and noise removal through wavelet shrinkage"*, IEEE Trans. Image Process., vol. 7, no. 3, pp. 319-335,

Austin, (2002)"*Digital Image processing using Mathematical Link for LAB VIEW*-", a demo developed for NI week, August.

Green, Thomas R. G., and Marian Petre. (1996) "*Usability analysis of visual programming environments: a 'cognitive dimensions' framework*." Journal of Visual Languages & Computing 7.2 pp 131-174.

Guide to the course design. (2007) "*Data processing environments MathCAD and Lab VIEW*"pp349-359, Taganrog

J. Travis. (2004) "*For all the LabVIEW / Trans. from English.*" ON. Klushina - M .: DMK Press; Priborkomplekt,. - pp544-559.

James S. Duncan, Nicholas Ayache, "*Medical Image Analysis:* (2000*) "Progress over Two Decades and the Challenges Ahead*", IEEE transactions on pattern analysis and machine intelligence, vol. 22, no. 1, January.

Jose Salvado, Bruno Roque . (2005). "*Detection of Calcifications in Digital Mammograms using Wavelet Analysis and Contrast Enhancement*", IEEE Int. Work shop in signal processing,pp.200-205 ,Portuga.l.

Lerner, Jeremy M., and Lewis A. Drake.(1999) "*Hyperspectral imaging in a LabVIEW environment."* BiOS'99 International Biomedical Optics Symposium. International Society for Optics and Photonics,.pp 567

Peytchev LI Tochilin DA, BP Pollack (2004) "*LabVIEW for beginners and specialists"*. - M.: Hotline - Telecom,. - 384 p.

Quintanilla-Dominguez, M.G.Cortina-Januchs, B.Ojeda-Magana, Aleksandar Jevti, A.Vega-Corona and D.Andina .(2010) ."*Microcalcifications Detection Applying Artificial Neural Networks And Mathematical morphology in Digital Mammograms"* WAC in signal&commun., pp.1-6, , Spain.

W. Fisher, et al, File Ned: (1987) "*A Distributed System Supporting WorkFlo; a Flexible Office Procedures Control Language*", IEEE Conference Paper, Apr. 27 29, 1987, Gaithersburg, MD, IEEE Computer Society Press, CH2414 1/897/0000/0226, pp. 226-232.

ISSN 2054-0957 (Print), ISSN 2054-0965 (Online)

Zharkov FP, Karataev, VV, Nikiforov VF Panov BC (1999) *"Using LabVIEW virtual instruments / Ed. KS Demirchyan and V.Mironov. - M .: Radio and Communications*",. - 268 p.

ISSN 2054-0957 (Print), ISSN 2054-0965 (Online)